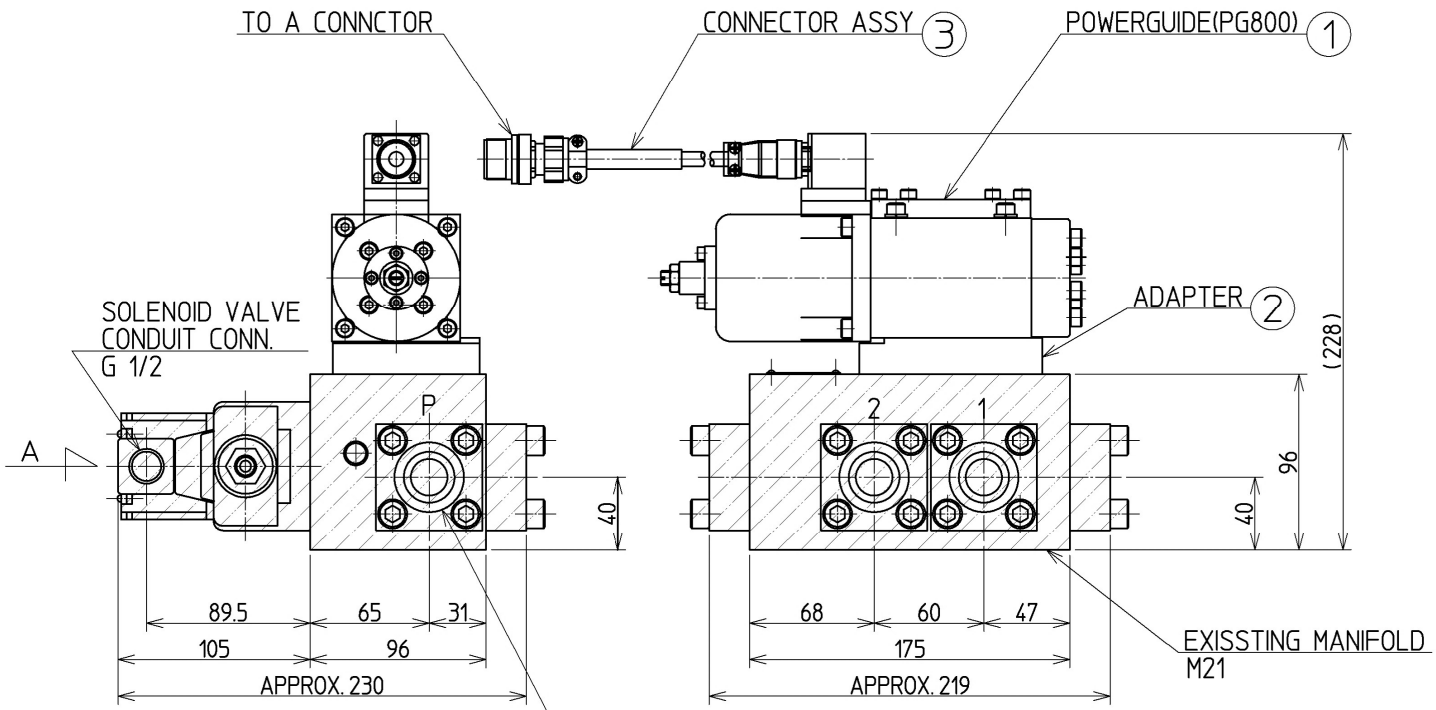

SPECIFICATIONS

1. SUPPLY PRESSURE : 2~14 MPa
2. MAX. BACK PRESS.
   INTERNAL DRAIN TYPE : 1 MPa ⚠a
   EXTERNAL DRAIN TYPE : 3 MPa
3. MASS. : APPROX. 20 kg

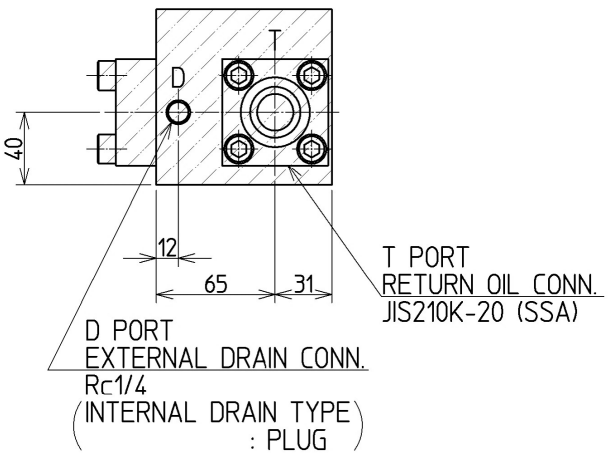

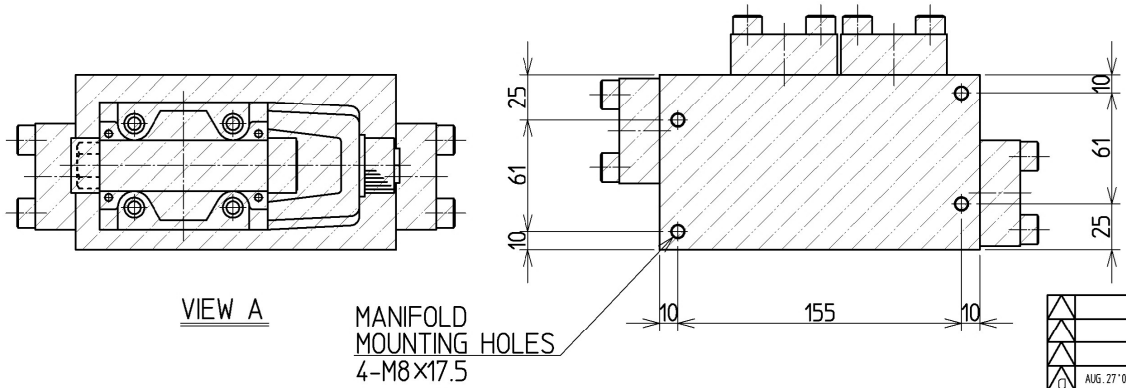

VIEW A

EXCHANGE PARTS ⚠a

1. POWERGUIDE
   DRG.NO. AD6930.0
2. ADAPTER WITH BOLT & O-RING
   DRG.NO. AD6935.0
3. CONNECTOR ASSY.(OPTION)
   DRG.NO. AD6936.0

No.	DATE	REV-No.	DESCRIPTION	REV.	CKD.
a	AUG.27'09	A03220	REV.	S.Koyama	Y.Imai

POWERGUIDE
PG800
PG902 REPLACEMENT

DGN.	-	OCT.05'07
DWN.	S.KOYAMA	OCT.05'07
CKD.	Y.IMAI	OCT.05'07
APPD.	T.KITANO	OCT.05'07

SCALE 1 : 3
MASS APPROX. –
ORDER No.

DRG. No. AD6941.0-EA

NIRECO CORPORATION

P /

FORM No.A3D202